6. Power Generation Technologies

CHP is the sequential or simultaneous generation of multiple forms of useful energy (usually mechanical and thermal) in a single, integrated system. CHP systems consist of a number of individual components—prime mover (heat engine), generator, heat recovery, and electrical interconnection—configured into an integrated whole. The type of equipment that drives the overall system (i.e., the prime mover) typically identifies the CHP system. Prime movers for CHP systems include steam turbines, gas turbines (also called combustion turbines), spark ignition engines, diesel engines, microturbines, and fuel cells. These prime movers are capable of burning a variety of fuels, including biomass/biogas, natural gas, or coal to produce shaft power or mechanical energy. Additional technologies are also used in configuring a complete CHP system, including boilers, absorption chillers, desiccants, engine-driven chillers, and gasifiers. Boilers and gasifiers are discussed in Chapter 5 of this document.

Although mechanical energy from the prime mover is most often used to drive a generator to produce electricity, it can also be used to drive rotating equipment such as compressors, pumps, and fans. Thermal energy from the system can be used in direct process applications or indirectly to produce steam, hot water, hot air for drying, or chilled water for process cooling.

The industrial sector currently produces both thermal output and electricity from biomass in CHP facilities in the paper, chemical, wood products, and food processing industries. These industries are major users of biomass fuels—utilizing the heat and steam in their processes can improve energy efficiencies by more than 35 percent. In these applications, the typical CHP system configuration consists of a biomass-fired boiler whose steam is used to propel a steam turbine in addition to the extraction of steam or heat for process use.

More information about how CHP systems work and an explanation of the key concepts of efficiency and power-to-heat ratios can be found in the "Catalog of CHP Technologies" on the EPA CHP Partnership's Web site.[69]

The following technologies are discussed in this chapter, with specific respect to their ability to run on biomass or biogas. A synopsis of key characteristics of each is shown in **Table 6-1**.

Steam turbines—Convert steam energy from a boiler or waste heat into shaft power.

Gas (combustion) turbines, including microturbines—Use heat to move turbine blades that produce electricity.

Reciprocating internal combustion (IC) engines—Operate on a wide range of liquid and gaseous fuels but not solid fuels. The reciprocating shaft power can produce either electricity through a generator or drive loads directly.

Fuel cells—Produce an electric current and heat from a chemical reaction between hydrogen and oxygen rather than combustion. They require a clean gas fuel or methanol with various restrictions on contaminants.

Stirling engines—Operate on any fuel and can produce either electricity through a generator or drive loads directly.

[69] EPA, 2004b.

Table 6-1. Comparison of Prime Mover Technologies Applicable to Biomass

Characteristic	Prime Mover					
	Steam Turbine	Gas/ Combustion Turbine	Micro-turbine	Reciprocating IC Engine	Fuel Cell	Stirling Engine
Size	50 kW to 250 MW	500 kW to 40 MW	30 kW to 250 kW	Smaller than 5 MW	Smaller than 1 MW	Smaller than 200 kW
Fuels	Biomass/ Biogas-fueled boiler for steam	Biogas	Biogas	Biogas	Biogas	Biomass or Biogas
Fuel preparation	None	PM filter needed	PM filter needed	PM filter needed	Sulfur, CO, methane can be issues	None
Sensitivity to fuel moisture	N/A	Yes	Yes	Yes	Yes	No
Electric efficiency (electric, HHV)*	5 to 30%	22 to 36%	22 to 30%	22 to 45%	30 to 63%	5 to 45%
Turn-down ratio	Fair, responds within minutes	Good, responds within a minute	Good, responds quickly	Wide range, responds within seconds	Wide range, slow to respond (minutes)	Wide range, responds within a minute
Operating issues	High reliability, slow start-up, long life, maintenance infrastructure readily available,	High reliability, high-grade heat available, no cooling required, requires gas compressor, maintenance infrastructure readily available	Fast start-up, requires fuel gas compressor	Fast start-up, good load-following, must be cooled when CHP heat is not used, maintenance infrastructure readily available, noisy	Low durability, low noise	Low noise
Field experience	Extensive	Extensive	Extensive	Extensive	Some	Limited
Commercialization status	Numerous models available	Numerous models available	Limited models available	Numerous models available	Commer-cial introduction and demonstr-ation	Commercial introduction and demonstr-ation
Installed cost (as CHP system)	$350 to $750/kW (without boiler)	~ $700 to $2,000/kW	$1,100 to $2,000/kW	$800 to $1,500/kW	$3,000 to $5,000 /kW	Variable $1,000 to $10,000 /kW
Operations and maintenance (O&M) costs	Less than 0.4 ¢/kWh	0.6 to 1.1 ¢/kWh	0.8 to 2.0 ¢/kWh	0.8 to 2.5 ¢/kWh	1 to 4 ¢/kWh	Around 1 ¢/kWh

* Efficiency calculations are based on the higher heating value (HHV) of the fuel, which includes the heat of vaporization of the water in the reaction products.

Source: NREL, 2003.

Each of these technologies will require a fuel that has gone through the various preparation steps outlined in Chapters 4 and 5. For power generation technologies that require steam for fuel (steam turbine), a boiler is used to combust the biomass fuel, converting it to steam. For power generation technologies that require gas to operate (gas turbines, reciprocating engines, fuel cells, Stirling engines), the biomass feedstock will either be gasified (as discussed in Chapter 5) or will be collected as biogas from an anaerobic digester or LFG (as discussed in Chapter 4).

As discussed in more detail in Chapter 4, some amount of gas cleaning is required for almost any prime mover to run on biogas, as is standard practice to date. This cleaning would minimally include the removal of solids and liquid water. Removing only solids and liquid water can leave corrosive components and siloxanes, which may damage the prime mover. As described in more detail in Chapter 3, some options for further cleanup are beginning to emerge, such as:

- Chemical "filters" to remove sulfur compounds
- Cooling the gas to remove additional moisture
- Filter systems to remove siloxanes
- Chemical systems to remove CO_2

Specific details regarding the use of biogas and biomass fuels in the various prime movers are discussed within each of the following subsections.

6.1 Steam Turbine Technologies

A steam turbine is a thermodynamic device that converts the energy in high-pressure, high-temperature steam into shaft power that can in turn be used to turn a generator and produce electric power. Unlike gas turbine and reciprocating engine CHP systems where heat is a byproduct of power generation, steam turbine CHP systems normally generate electricity as a byproduct of heat (steam) generation. A steam turbine requires a separate heat source and does not directly convert fuel to electric energy. The energy is transferred from the boiler to the turbine through high-pressure steam, which in turn powers the turbine and generator[70]. This separation of functions enables steam turbines to operate with an enormous variety of fuels, from natural gas to solid waste, including all types of coal, wood, wood waste, and agricultural byproducts (sugar cane bagasse, fruit pits, and rice hulls). In CHP applications, steam at lower pressure is extracted from the steam turbine and used directly or is converted to other forms of thermal energy.

In the thermodynamic cycle illustrated in **Figure 6-1**, called the Rankine cycle, liquid water is converted to high-pressure steam in the boiler and fed into the steam turbine. The steam causes the turbine blades to rotate, creating power that is turned into electricity with a generator. A condenser and pump are used to collect the steam exiting the turbine, feeding it into the boiler and completing the cycle. There are several different types of steam turbines: 1) A condensing steam turbine as shown in Figure 6-1 is for power-only applications and expands the pressurized steam to low pressure at which point a steam/liquid water mixture is exhausted to a condenser at vacuum conditions; 2) Extraction turbines have openings in their casings for extraction of a portion of the steam at some intermediate pressure for process or building heating; 3) Back-pressure turbines exhaust the entire flow of steam to the process or facility at the required pressure.

[70] Steam turbines are also used to drive pumps, compressors and other mechanical equipment.

Steam turbines are one of the most versatile and oldest prime mover technologies still in commercial production. Power generation using steam turbines has been in use for about 100 years, when they replaced reciprocating steam engines due to their higher efficiencies and lower costs. Conventional steam turbine power plants generate most of the electricity produced in the United States. The capacity of steam turbines can range from 50 kW to several hundred MW for large utility power plants. Steam turbines are widely used for CHP applications.

Figure 6-1. Simple Steam Turbine Power Cycle

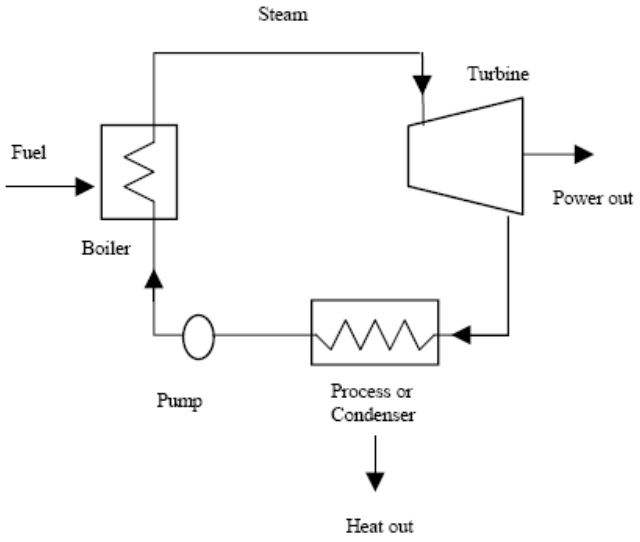

Source: EPA, 2004b.

Key performance characteristics of a steam turbine CHP system are shown in **Table 6-2.**

Table 6-2. Steam Turbine CHP Typical Performance Parameters

Steam Turbine Parameters	System 1	System 2	System 3
Nominal electricity generating capacity (kW)	500	3,000	15,000
Turbine type	Back-pressure	Back-pressure	Back-pressure
Equipment cost ($/kW)*	600	275	225
O&M costs ($/kWh)*	0.004	0.004	0.004
Turbine isentropic efficiency (%)	50	70	80
Generator/gearbox efficiency (%)	94	94	97
Steam flow (lbs/hr)	21,500	126,000	450,000
Inlet pressure (psig)	500	600	700
Inlet temperature (°F)	550	575	650
Outlet pressure (psig)	50	150	150
Outlet temperature (°F)	298	366	366
CHP System Parameters			
Boiler efficiency, HHV (%)	80	80	80
Fuel input (MMBtu/hr)	26.7	147.4	549.0
Steam to process (MMBtu/hr)	19.6	107.0	386.6
Power/heat ratio	0.09	0.10	0.13
Total CHP Efficiency, HHV (%)	79.8	79.5	79.7

* Steam turbine gen-set only (boiler and fuel prep equipment not included).
Source: NREL, 2003.

6.2 Gas Turbine Technologies

Combustion turbines, or gas turbines, have been used for power generation for decades and are often the technology of choice for new electric generation in the United States and much of the world due to their low capital cost, low maintenance, and low emissions. Turbine technology was developed in the 1930s as a means of propulsion for jet aircraft. Use of turbines for power generation began in the 1940s and 1950s, but it was not until the early 1980s that improvements in turbine efficiency and reliability resulted in increased utilization for power production.

The gas turbine is an internal combustion engine that operates with rotational rather than reciprocating motion. Turbines can be fueled by natural gas or biogas and are used in a broad scope of applications, including electric power generation, gas pipeline compressors, and various industrial applications requiring shaft power. While many newer turbines are large utility units, manufacturers are producing smaller and more efficient units that are well-suited to distributed generation applications. Turbines range in size from 30 kW (microturbines) to 250 MW (large industrial units).

Gas turbines can be used in a variety of configurations:

- **Simple-cycle operations**—a single gas turbine producing power only.
- **CHP operations**—a simple-cycle gas turbine with a heat recovery/heat exchanger that recovers the heat from the turbine exhaust and converts it to useful thermal energy, usually in the form of steam or hot water.
- **Combined-cycle operation**—high-pressure steam is generated from recovered exhaust heat and used to create additional power using a steam turbine. Some combined-cycle turbines

extract steam at an intermediate pressure for use in industrial processes, making them combined cycle CHP systems.

An illustration of the configuration of a gas turbine is shown in **Figure 6-2**. As illustrated in the figure, gas turbine power generation systems use the Brayton cycle and consist of a compressor to compress the air to high pressure, a combustor chamber operating at high pressure, the gas turbine itself (shown in two parts), and the generator. The turbine section comprises one or more sets of turbine blades that extract mechanical energy from the hot combustion products. Some of that energy is used to power the compressor stage; the remaining energy is available to drive an electric generator or other mechanical load. The compressor and all of the turbine blades can be on one shaft or there can be two shafts, one for the compressor and the turbine stages that drive it, and a second for the turbine stages that produce useful output. To inject the fuel into the pressurized combustion chamber, the fuel must also be pressurized. A low Btu gas—like most biogas—will require only a small pump, while high-Btu (greater than about 1,000 Btu/standard cubic feet [scf]) gas requires a small compressor. Theoretical turbine efficiency is a function of turbine inlet temperature and pressure ratio across the power turbine, with higher levels of both factors leading to higher efficiency. Inlet temperature is limited by the ability of the turbine blades to operate at that temperature over the lifetime of the turbine.

Figure 6-2. Components of a Simple-Cycle Gas Turbine

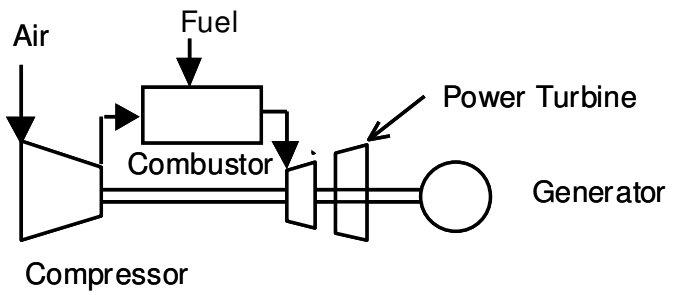

Source: Energy and Environmental Analysis, Inc., 2003.

Typical performance and cost characteristics of gas turbines based on natural gas fuel are shown in **Table 6-3.** There are some notable differences in gas turbine performance with biogas fuels, as discussed below.

Table 6-3. Gas Turbine CHP Typical Performance Parameters

Cost and Performance Characteristics	System 1	System 2	System 3	System 4	System 5
Electricity capacity (kW)	1,000	5,000	10,000	25,000	40,000
Equipment cost ($/kW)*	$1,200	$600	$600	$520	$460
O&M costs ($/kWh)*	0.010	0.006	0.006	0.005	0.005
Electric heat rate (Btu/kWh), HHV	15,580	12,555	10,950	9,945	9,220
Electrical efficiency, HHV (%)	21.9	27.8	31.2	34.3	37.0
Fuel input (MMBtu/hr)	15.6	62.8	109.5	248.6	368.8
Required fuel gas pressure (psig)	95	160	250	340	435
CHP Characteristics					
Steam output (MMBtu/kWh)	7,108	5,018	4,549	3.592	3,189
Power/heat ratio	0.48	0.68	0.75	0.95	1.07
Total CHP efficiency, HHV (%)	68	67	73	70	72

* Cost for natural gas fueled gas turbine-generator set only (gasification and heat recovery not included).
Source: NREL, 2003.

A biomass gas turbine system requires LFG, anaerobic digester gas, or a biomass gasifier to produce the biogas for the turbine. This biogas must be carefully filtered of PM to avoid damaging the blades of the gas turbine. Additionally, because a typical biomass gasifier produces a low-Btu biogas (e.g., 100 Btu/scf), the fuel compressor must be sized to handle about 10 times the gas flow compared to natural gas to provide the same Btu to the combustor. These flow needs make the shaft power to the fuel compressor comparable to the power of the air compressor, thereby reducing the turbine's efficiency. In a conventional gas turbine, the turbine is designed to handle about 10 percent more flow (standard cubic feet per minute) than the air compressor. In a low-Btu gas turbine, the turbine must be designed to handle about twice the flow of the air compressor. In addition, the air-to-fuel ratio is lower for biogas than for natural gas, so not all of the compressed air is needed. Some of this compressed air can be redirected to provide energy to the air compressors for pressurized direct gasifiers or to help compress the biogas in atmospheric gasifiers. Without removal of the excess air, the capacity of the turbine would be significantly reduced.

Because of all the modifications required, existing natural gas turbines cannot easily be retrofitted to operate on low-Btu biogas (< 300 Btu/scf). Gas turbines designed for low-Btu biogas generally cost at least 50 percent more than natural gas turbines on a per kW basis. Many gas turbine manufacturers offer turbine products that operate on medium-Btu landfill and wastewater treatment gas at equipment costs that are slightly higher than natural gas turbines, assuming the gas is properly treated and cleaned. Non-fuel O&M costs will increase for gas turbines using low- and medium-Btu biogas due to increased cleaning and more frequent maintenance intervals (this does not include the O&M costs of biogas treatment and cleanup, which is discussed separately); natural gas O&M costs provided in **Table 6-3** would increase by at least 75 percent for low-Btu biogas operation.[71]

Figure 6-3 shows the proposed integration of a gas turbine in a biomass gasification facility. While a number of gas turbines have been studied and tested for low-Btu biogas use modification and integration, commercial experience is very limited. At the time this report was prepared, there were no identified gas turbines operating on low-Btu syngas from gasification. There are biomass gasifiers that produce syngas for cofiring in integrated coal gasification combined-cycle power plants. There have also

[71] Resource Dynamics Corporation, 2004.

been biomass gasifiers built with the intention of ultimately integrating them with gas turbines; in the interim, biogas is being used as a supplemental fuel.

There are a large number of gas turbines operating on the medium-Btu gas produced by landfills and, to a lesser extent, wastewater treatment plants. In these applications, gas cleaning is required to remove siloxane, chlorine and sulfur compounds, and moisture.

Figure 6-3. Proposed Gas Turbine Configuration in Integrated Biomass Gasification Facility

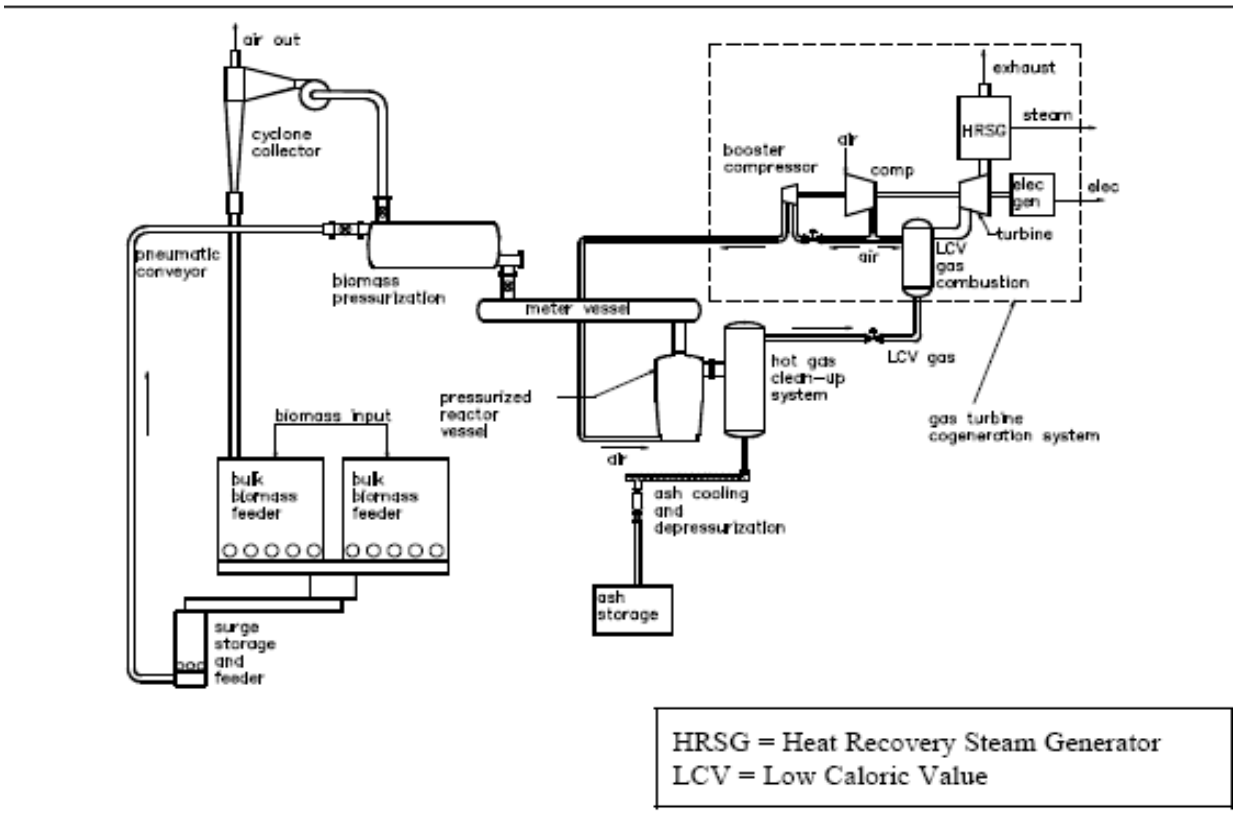

Source: Purvis, 1998.

6.3 Microturbine Systems

Microturbines are small gas turbines that burn clean gaseous and liquid fuels to create mechanical energy that turns an electrical generator or other load. Today's microturbine technology is the result of development work in small stationary and automotive gas turbines, auxiliary power equipment, and turbochargers, much of which was pursued by the automotive industry beginning in the 1950s. Microturbines entered field-testing around 1997 and began initial commercial service in 1999.

The size range for microturbines, either commercially available or in development, is from 30 to 250 kW. Microturbines, like larger gas turbines, can be used in power-only generation or in CHP systems. They are able to operate using a wide variety of fuels, including natural gas; sour gases (high sulfur content); biogas and medium-Btu gases, such as LFG and digester gas; biofuels; and liquid fuels such as gasoline, kerosene, and diesel fuel/distillate heating oil.

Microturbines generally have lower electrical efficiencies than similarly sized reciprocating engine generators and larger gas turbines. However, because of their design simplicity and relatively few moving parts, microturbines offer the potential for reduced maintenance compared to reciprocating engines.

Microturbines usually have an internal heat recovery heat exchanger called a recuperator. In typical microturbines, the inlet air is compressed in a radial compressor and then preheated in the recuperator using heat from the turbine exhaust. Heated air from the recuperator is mixed with fuel in the combustor and ignited. The hot combustion gas is then expanded in one or more turbine sections, producing rotating mechanical power to drive the compressor and the electric generator. In single-shaft models, a single expansion turbine turns both the compressor and the generator. Two-shaft models use one turbine to drive the compressor and a second turbine to drive the generator, with exhaust from the compressor turbine powering the generator turbine. The power turbine's exhaust is then used in the recuperator to preheat the air from the compressor.

The basic components of a microturbine are shown in **Figure 6-4.** The heart of the microturbine is the compressor-turbine package, which is most commonly mounted on a single shaft along with the electric generator. Because the turbine shaft rotates at a very high speed, the electric output of the generator must be processed to provide 60 Hertz (Hz) power (the frequency standard in the U.S.)

The single shaft is supported by two (or more) high-speed bearings. Because single-shaft turbines have only one moving part, they have the potential for low maintenance and high reliability. There are also two-shaft versions of the microturbine, in which the turbine on the first shaft only drives the compressor while a power turbine on a second shaft drives a gearbox and conventional electrical generator producing 60 Hz power. The two-shaft design has more moving parts but does not require sophisticated power electronics to convert high-frequency alternating current (AC) power output to usable 60 Hz power.

Figure 6-4. Microturbine-Based CHP System (Single-Shaft Design)

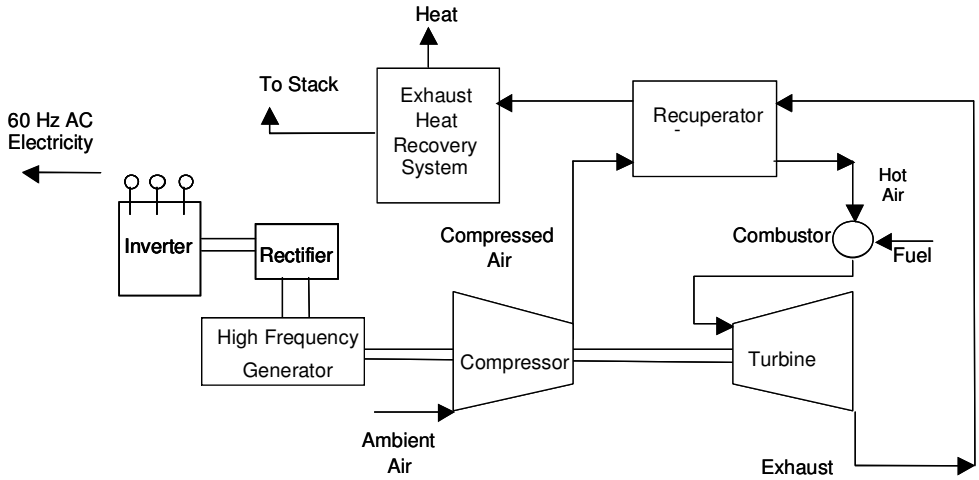

Source: Energy and Environmental Analysis, Inc., 2003.

Microturbines require gaseous fuel to be supplied in the 64 to 100 psig range, or above. Rotary vane, scroll, and screw compressors have been used to boost fuel gas pressure at the site to the pressure needed by the microturbine. However, this further reduces the efficiency of the system.

In CHP operation, a second heat recovery heat exchanger—the exhaust gas heat exchanger—can be used to transfer remaining energy from the microturbine exhaust to a hot water system. Recuperated microturbines have lower temperature exhaust than simple-cycle turbines; however, exhaust heat at low temperatures can be used for a variety of different applications, including process or space heating, heating potable water, driving absorption chillers, or regenerating desiccant dehumidification equipment. Some microturbine-based CHP applications have the ability to bypass their recuperator to adjust their thermal-to-electric ratio or do not use recuperators at all. The temperature of the exhaust from these microturbines is much higher (up to 1,200 ºF) and thus, more and higher temperature heat is available for recovery. Typical performance and cost characteristics of microturbines based on natural gas fuel are shown in **Table 6-4.**

Microturbines have demonstrated that they can handle landfill and wastewater treatment gas, and in some cases low-Btu biogas, reasonably well because of their simple design. No major modifications are needed, but in addition to the power required by the fuel gas compressor, there is a small reduction in power output (10 to 15 percent) when running on landfill or digester gas. With both factors considered, a 15 to 20 percent increase in price per kW would be expected for microturbines operating on landfill or digester gas compared to the price for natural gas fired units of the same size. Maintenance costs would also increase 30 to 40 percent due to shorter maintenance intervals and increased inspections.[72]

Table 6-4. Microturbine CHP Typical Performance Parameters

Cost and Performance Characteristics	System 1	System 2
Electric Capacity (kW)	100	250
Equipment Cost ($/kW)*	$1,350	$1,100
O&M Cost ($/kWh)*	0.015	0.012
Electric Heat Rate, HHV (Btu/kWh)	13,555	11,850
Electrical Efficiency, HHV (%)	25.2	28.8
Fuel Input (MMBtu/hr)	1.4	3.0
CHP Characteristics		
Heat Recovered (MMBtu/kWh)	5,018	3,630
Total CHP Efficiency (%)	62	59
Power/Heat Ratio	0.68	0.94

*Cost for natural gas-fueled microturbine only (gasification and biogas treatment not included).
Source: NREL, 2003.

6.4 Reciprocating Internal Combustion Engine Technologies

Reciprocating internal combustion engines are a widespread and well-known technology. North American production exceeds 35 million units per year for automobiles, trucks, construction and mining equipment, marine propulsion, lawn care, and a diverse set of power generation applications. A variety of stationary engine products are available for a range of power generation market applications and duty cycles, including standby and emergency power, peaking service, intermediate and base load power, and CHP. Reciprocating IC engines are available for power generation applications in sizes ranging from a few kilowatts to more than 5 MW.

[72] Resource Dynamics Corporation, 2004.

There are two basic types of reciprocating IC engines—spark ignition (SI) and compression ignition (CI). SI engines for power generation use natural gas as the preferred fuel, although they can be configured to run on propane, gasoline, biogas, or LFG. CI engines (often called diesel engines) operate on diesel fuel or heavy oil, or they can be set up to run in a dual-fuel configuration that burns primarily natural gas or biogas with a small amount of diesel pilot fuel.

Although diesel engines have historically been the most popular type of reciprocating IC engine for power generation applications, their use has been increasingly restricted to emergency standby or limited duty-cycle service in the United States and other industrialized nations because of air emission concerns, particularly associated with NO_x and PM. Consequently, the natural gas-fueled SI engine, which could also run on biogas, is now the engine of choice for the higher-duty-cycle stationary power market (more than 500 hr/yr) and is the primary focus of this discussion.

Reciprocating IC engine technology has improved dramatically over the past three decades, driven by economic and environmental pressures for power density improvements (more output per unit of engine displacement), increased fuel efficiency, and reduced emissions. Computer systems have greatly advanced reciprocating engine design and control, accelerating advanced engine designs and enabling more precise control and diagnostic monitoring of the engine process. Stationary engine manufacturers and worldwide engine research and development firms continue to drive advanced engine technology, including accelerating the diffusion of technology and concepts from the automotive market to the stationary market.

Typical performance and cost characteristics of reciprocating engines based on natural gas fuel are shown in **Table 6-5.**

Table 6-5. Gas IC Engine CHP Typical Performance Parameters

Cost and Performance Characteristics	System 1	System 2	System 3	System 4	System 5
Electric capacity (kW)	100	300	1000	3,000	5,000
Equipment cost ($/kW)*	$900	$770	$720	$570	$550
O&M cost ($/kWh)*	0.018	0.013	0.009	0.008	0.008
Electric heat rate, HHV (Btu/kWh)	11,500	11,000	10,200	9,533	9,213
Electrical efficiency, HHV (%)	29.7	31.0	33.5	35.8	37.0
Fuel input (MMBtu/hr)	1.11	3.29	10.2	28.6	46.1
CHP Characteristics					
Heat recovered (MMBtu/kWh)	5,593	5.093	3,709	3,281	3,345
Total CHP efficiency (%)	78	77	70	70	73
Power/heat ratio	0.61	0.67	0.92	1.04	1.02

* Costs for natural gas fueled engine-generator set only (gasification and fuel treatment not included).
Source: NREL, 2003.

A biogas-fired reciprocating engine system will encounter many of the same operating issues as a biogas-fired gas turbine:

LFG, an anaerobic digester, or a biomass gasifier is needed to produce the biogas fuel for the engine.

The biogas must be carefully filtered of PM to avoid damaging the engine.

The engine must be de-rated for burning low-Btu biogas rather than natural gas.

The engines will require modification to accommodate higher flow rates and impurities. However, required modifications to reciprocating engines are achieved more easily. In most cases, more filtration devices and new manifolds are all that is required to accommodate medium-Btu gases such as landfill and digester gas, typically adding about 5 percent to the cost of a natural gas engine. In addition, the lower heating values of biogas result in about a 15 percent decrease in power output compared to a natural gas engine, further increasing the overall equipment cost on a per kilowatt basis. Maintenance issues associated with biogas use in reciprocating engines include increased wear and tear, more cleaning, and up to eight times more frequent oil changes. Total non-fuel O&M costs for a biogas engine are approximately 60 to 70 percent higher than for a natural gas engine.[73]

The recovery of heat from a reciprocating IC engine is more complex, but more flexible, than from a gas turbine. As illustrated in **Figure 6-5**, heat can be recovered not only from the exhaust, but also from the jacket water and the engine oil. The high-temperature heat source is the engine exhaust, at 600-1,200° F. Depending upon the design, between 1,000 and 2,200 Btu can be recovered from the exhaust per kilowatt of engine shaft power. The jacket water leaves the engine (shown in the lower left corner of the engine) at about 200° F. As much as 4,000 Btu/kWh of heat can be recovered from the jacket water, depending on the system design, but 2,500 Btu/kWh is more typical. In this diagram, the heat from the engine exhaust is used to heat the jacket water before it is sent to the heat exchanger. If the heat demand is less than the heat produced by the CHP system, some of the jacket water is shunted to the excess heat exchanger, where the heat is dumped to the atmosphere. After moving through the heat exchangers, the jacket water is pumped through the oil cooler heat exchanger (slightly heating the jacket water) and back into the engine. In a separate circuit, the engine lube oil is pumped from the oil pan through the oil cooler and back into the engine. Only 300 to 900 Btu/kWh can be recovered from the engine lube oil. Another heat source (not shown) is turbocharger intercooling and aftercooling, which may be either separate or part of the jacket cooling system. The three potential heat loops offer an opportunity to design the heat recovery to most closely match the heat load of the site.

Figure 6-5. Closed-Loop Heat Recovery System for a Reciprocating IC Engine

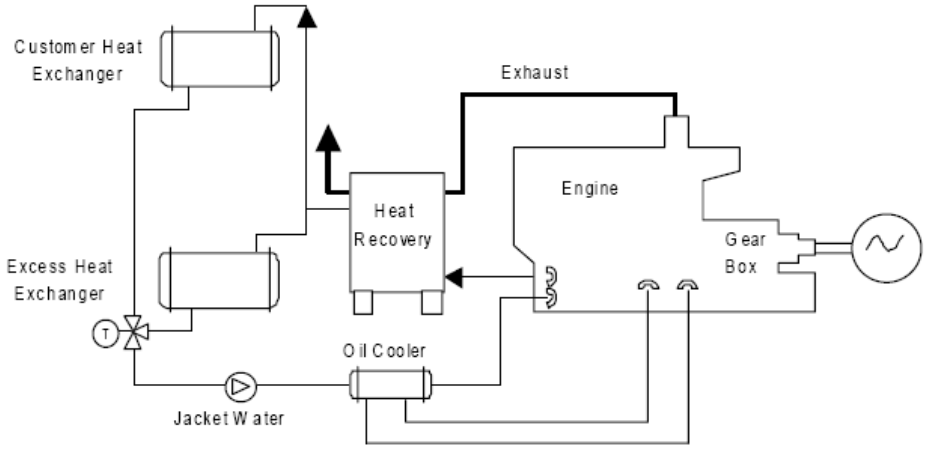

Source: EPA, 2004b.

There are a large number of gas IC engines operating on medium-Btu gas from landfills, wastewater treatment plants, and some installations at animal feedlots. Major engine manufacturers offer engine configuration packages and ratings specifically for medium-Btu gas. Additionally, some modular

[73] Resource Dynamics Corporation, 2004.

biomass gasification development and demonstration projects fire a low-Btu biogas in reciprocating IC engines. These systems require a supplementary liquid or gaseous fuel for start-up.

6.5 Fuel Cell Systems

Fuel cells are an emerging small-scale power generation technology with high electrical efficiency and very low emissions. In fuel cells, the fuel is chemically combined with oxygen to create electricity, with useful heat as a byproduct. Because there is no combustion, fuel cells are quiet, have no moving parts, and can achieve electric efficiencies up to two times greater than internal combustion engines. Fuel cells can be sized for a wide variety of applications—from laptop computers (50 to 100 watts) to vehicles (50 to 85 kW) to central power generation (0.2 to 2 MW).

Cost and durability are the major challenges to fuel cell commercialization. Fuel cells are currently more expensive than internal combustion engines and have difficulty maintaining performance over the full useful life of the load served. The size, weight, thermal management, and water management of fuel cells are also barriers.

A fuel cell power system has many components, but its heart is a fuel cell "stack." The stack is actually made of many thin, flat fuel cells layered together. The term "fuel cell" is often used to refer to the entire stack, but strictly speaking, it refers only to the individual cells. A single cell produces a small amount of electricity, but hundreds of cells can be stacked together to produce a useable quantity of electricity.

A single fuel cell consists of an electrolyte and two catalyst-coated electrodes (a porous anode and cathode). Several different types of fuel cells are currently under development—each classified primarily by the kind of electrolyte it uses. The electrolyte determines the kind of chemical reactions that take place in the cell (see discussion below), the temperature range in which the cell operates, and other factors that affect the applications for which the fuel cell is most suitable, as well as its advantages and limitations.

Fuel cells require hydrogen for operation[74]. However, it is generally impractical to use hydrogen directly as a fuel source; instead it is extracted from hydrocarbon fuels or biogas feed using a reformer. The reformers produce and/or increase the concentration of hydrogen and decrease the concentration of gas species toxic to the fuel cell. In all three types of reformers (partial oxidation, autothermal reformation, and preferential oxidation), fuel processing techniques use some of the energy contained in the fuel to convert the hydrocarbons to hydrogen and CO. The reforming process is often performed at elevated pressure to allow a smaller equipment footprint.

Four main types of fuel cells are in various phases of development for stationary applications: phosphoric acid fuel cell (PAFC), proton exchange membrane fuel cell (PEMFC), molten carbonate fuel cell (MCFC), and solid oxide fuel cell (SOFC). To date, only the PAFC and the MCFC have operated on biogas. Typical performance and cost characteristics of fuel cells based on natural gas fuel are shown in **Table 6-6.**

As listed in **Table 6-7**, the fuel cell technology determines what constituents are desirable and acceptable in the processed fuel and oxidant streams. For example, fuel sent to a PAFC needs to be hydrogen-rich and have less than 5 percent CO, while both the MCFC and SOFC are capable of utilizing CO. PEMFCs require a pure hydrogen stream with less than 10 parts per million (ppm) CO. SOFCs and internal reforming MCFCs are capable of utilizing methane from anaerobic digesters or LFG within the cell, whereas PAFCs are not (PAFCs need an external reformer and have a low tolerance for methane

[74] Direct methanol fuel cells are under development.

directly in the stack). Each fuel cell technology also has specific contamination limits that define the cleanup processes that are required.

Table 6-6. Fuel Cell CHP Typical Performance Parameters

Cost and Performance Characteristics	System 1	System 2	System 3	System 4	System 5
Fuel cell type	PAFC	MCFC	MCFC	PEM	SOFC
Nominal electric capacity (kW)	200	250	2,000	200	100
Commercial status	Commercial	Commercial	Demonstration	Demonstration	Demonstration
Equipment cost ($/kW)*	5,100	5,100	2,900		
O&M costs ($/kW)*	0.03	0.043	0.033		
Electric heat rate (Btu/kWh)	9,480	7,930	7,420	9,750	7,580
Electrical efficiency, HHV (%)	36	43	46	35	45
Fuel input (MMBtu/hr)	1.90	2.00	14.80	2.00	0.80
CHP Characteristics					
Heat output (MMBtu/kWh)	3,709	1,750	1,777	3,592	1,906
Total CHP efficiency, HHV (%)	75	65	70	72	70
Power/heat ratio	0.92	1.95	1.92	0.95	1.79

Costs for natural gas fueled fuel cell only (gasification and fuel treatment not included).
Source: NREL, 2003.

Table 6-7. Contamination Limitations on Fuel and Oxidant Delivered to Fuel Cells

Contaminant	Fuel Cell Type			
	PAFC	PEMFC	MCFC	SCFC
Oxidant	Air or oxygen-enriched air	Air to oxygen	Air	Air
Hydrogen	> ~90%	> ~99%	Yes	Yes
CO	< 3-5%	<10 ppm (toxic)	Some OK	Some OK
CO_2	Tolerates	< ~1%	Some OK	Some OK
Methane (CH_4)	No	No	Some OK	Up to 100% OK
Methanol (CH_3OH)	No	No	No	No
Hydrogen sulfide (H_2S)	< ~1 ppm	< 1 ppm	< ~1 ppm	< ~1 ppm
H_2S, carbonyl sulfide (COS), ammonia (NH_3), hydrogen cyanide (HCN), particulates, tars, oils, and phenols	No (sulfur is toxic)	No (sulfur and ammonia are toxic)	No (sulfur is toxic)	No (sulfur is toxic)

Source: NREL, 2003.

While most operating experience with fuel cells has been with natural gas, there are a handful of fuel cell installations operating in the United States powered by digester gas or LFG. Both PAFC and MCFC configurations have been demonstrated. These systems require a different fuel reformer with larger fuel injectors and additional piping. Gasifiers typically produce contaminants, which need to be removed before the hydrogen enters the fuel cell anode. The contaminant levels are dependent upon both the fuel composition and the gasifier employed. To meet the fuel standards described in **Table 6-7**, the gas product from the gasifier must be processed, which might involve gas cleanup, reforming, and purification. Gas cleanup equipment that efficiently and reliably removes contaminants to the specifications required by fuel cells is yet to be demonstrated.

Since fuel cells are in the early stages of commercial introduction, long-term experience on both natural gas and biogas has been limited, making it difficult to estimate what impacts the use of biogas would have on overall equipment and maintenance costs. Units operating on biogas would likely cost slightly more than natural gas versions and have a small decline in output. Maintenance would also likely be higher as biogas with more impurities might require increased cleaning and maintenance of the fuel gas reformer. It is likely that both equipment and maintenance costs of a biogas-fueled fuel cell would be at least 10 percent higher than a comparable natural gas-fueled system.

6.6 Stirling Engines

Like internal combustion engines, the Stirling engine is a reciprocating engine. However, the Stirling engine is an externally heated engine, and if that heat is supplied by a combustion process, it is an external combustion engine. The heat is transferred to the working gas and is then converted to work via the Stirling thermodynamic cycle. The internal combustion engine, by comparison, requires a pressure change—generated by burning of fuel in the cylinder—to work. Because the Stirling engine heat is supplied externally, a wide variety of heat sources can be used (such as fossil fuels, solar, nuclear, and waste heat), but the Stirling engine is particularly well-suited to biomass fuels.

As an external combustion engine, fuel is burned in a continuous manner outside of the Stirling engine's cylinders. This is unlike an internal combustion engine, where the fuel is injected into the cylinders intermittently and then exploded. Thus, external combustion allows for more complete burning of the fuel, which results in lower emissions. The external combustion also provides the extra benefit of reduced noise and vibration compared to internal combustion engines.

To complete the thermodynamic cycle, a Stirling engine must also be externally cooled. This can be accomplished in a variety of ways:

Forced or free convection cooling (e.g., air flowing over fins).

Water, ethylene glycol, or a mixture of both circulated through a cooling jacket surrounding the cold end of the engine. (The coolant is kept cool by a heat exchanger similar to or identical to a radiator in an automobile.)

Stirling engine systems are not commercially available today for stationary power applications. A number of Stirling generating systems are under development, and prototype systems are in field testing in wastewater treatment and other biomass applications. The key research and development challenge facing Stirling engine commercialization is to develop and mass-produce reliable, low-cost Stirling engines that compete with the cost and performance achieved by other traditional technologies. Typical Stirling engine CHP systems are compared in **Table 6-8.**

Table 6-8. Comparison of Stirling Engine Technologies

Characteristics	System 1	System 2	System 3
Electric Output (kW)	10	25	25
Usable Heat Output ($kW_{thermal}$)	24	44	N/A
Electric Efficiency[75] (%)	24	31	38

Source: NREL, 2003

[75] Based on low heating value fuel input to AC electric power output.